ATK-DLIMX91S

Development Board Specification

V1.0

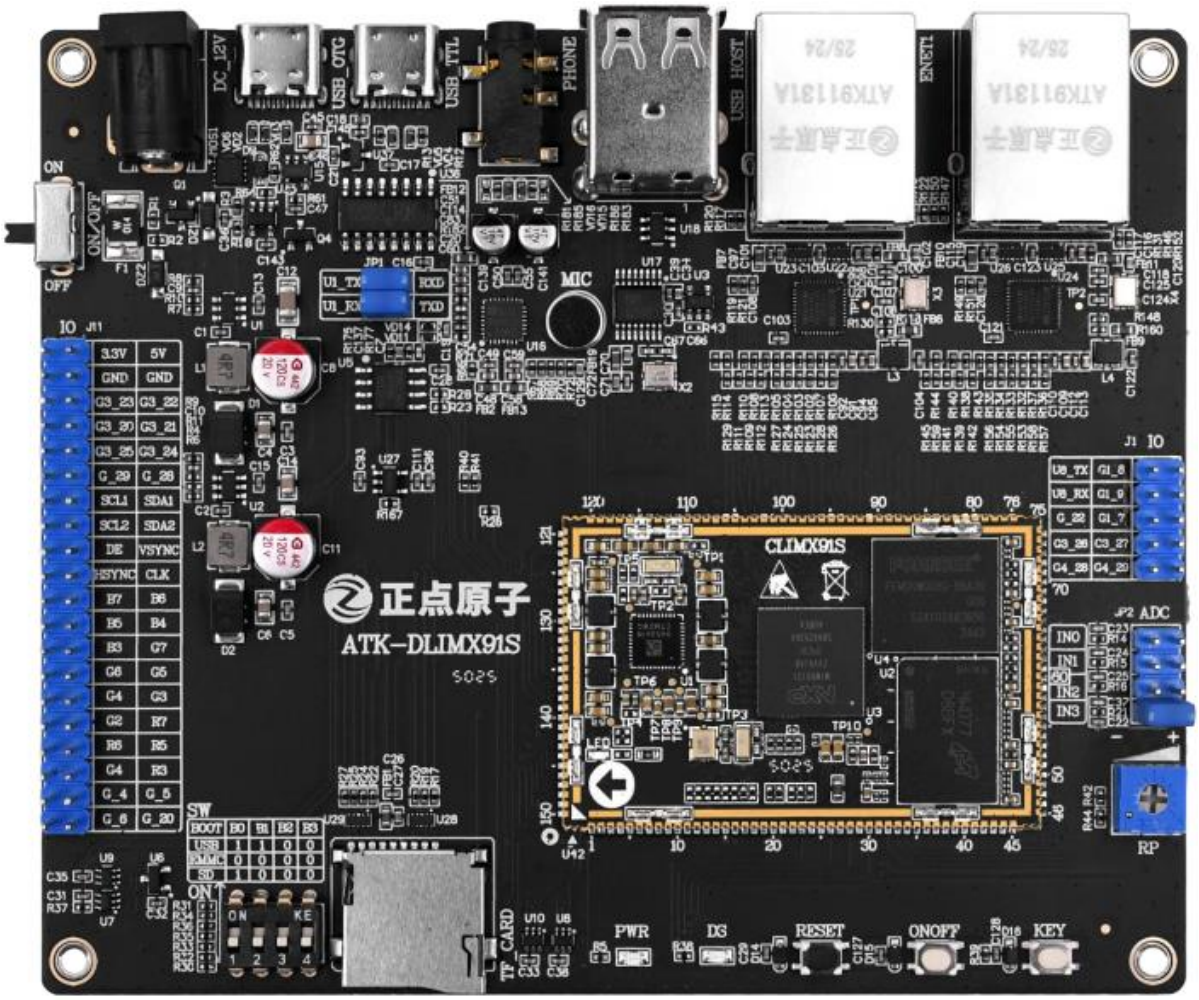

ALIENTEK

1. Shopping:

TMALL: https://zhengdianyuanzi.tmall.com

TAOBAO: https://openedv.taobao.com

2. Download

Address: http://www.openedv.com/docs/index.html

3. FAE

Website : www.alientek.com

Forum : http://www.openedv.com/forum.php

Videos : www.yuanzige.com

Fax : +86 - 20 - 36773971

Phone : +86 - 20 - 38271790

Disclaimer

The product specifications and instructions mentioned in this document are for reference only and subject to update without prior notice; Unless otherwise agreed, this document is intended as a product guide only, and none of the representations made herein constitutes a warranty of any kind. The copyright of this document belongs to Guangzhou Xingyi Electronic Technology Co., LTD. Without the written permission of the company, any unit or individual shall not be used for profit-making purposes in any way of dissemination.

In order to get the latest version of product information, please regularly visit the download center or contact the customer service of Taobao ALIENTEK flagship store. Thank you for your tolerance and support.

Revision History:

Version	Version Update Notes	Responsible person	Proofreading	Date
V1.0	release officially	ALIENTEK Linux Team	ALIENTEK Linux Team	2026.04.01

Catalogue

Chapter 1. Overview of Development Board 1
1.1 Introduction to the development board 1
1.2 Typical Application Areas 1
Chapter 2. Development Board Resources 3
2.1 Processor Resources 3
2.2 Onboard Peripheral Resources 4
2.3 Development Board Software Resources 5
2.3.1 Software Resource Summary 5
2.3.2 Driver Support Table 5
Chapter 3. Product Specifications 7
3.1 Development Board Appearance 7
3.2 Mechanical Dimensions of the Development Board 8
3.3 Adapted Modules of the Development Board 9
Chapter 4. Product Documentation 11
4.1 Document Download 11
4.2 Data Description 11
4.2.1 User manual 12
4.2.2 Tutorials 13
4.2.3 Core board data 13
Chapter 5. After sales service 14
5.1 Terms of after-sales service 14
5.2 After-sales Support 14

Chapter 1. Overview of Development Board

1.1 Introduction to the development board

The ATK-DLIMX91S development board is a high-performance embedded Linux development platform independently developed by ALIENTEK based on the NXP i.MX91 processor, designed specifically for embedded system development and industrial applications. The platform consists of the ATK-CLIMX91S core board and a baseboard. The core board and baseboard adopt the via-to-via bonding and soldering process, which ensures stable and reliable electrical connections while taking into account the convenience and consistency of mass production.

The ATK-CLIMX91S core board is equipped with the high-performance i.MX91 processor, integrating a 64-bit single-core ARM Cortex-A55 with a main frequency up to 1.4 GHz. The processor natively supports a wealth of peripheral interfaces including I2C, I3C, SAI, SPI, UART, CAN-FD, Gigabit Ethernet, LCD RGB, USB, SDIO, JTAG and ADC. It is widely applicable to various fields such as smart home, networked home appliances, home entertainment, industry and medical treatment.

The core board is standardly equipped with 1GB LPDDR4 memory and 8GB eMMC storage, which fully meets the development and application requirements of various embedded products. It also supports mass customization of different storage capacities to provide users with flexible configuration options.

The baseboard features an efficient and streamlined design, integrating multiple commonly used functional interfaces including 2-channel Gigabit Ethernet, 1 TF card slot, 2 USB Host ports and serial ports, covering the key resources required for mainstream embedded system development.

ALIENTEK provides abundant and free open-source resources for users of the ATK-DLIMX91S development board.

In terms of software, it includes U-Boot source code, Linux kernel source code, peripheral drivers, file system, Qt interface source code, Linux C application examples, as well as various development tools and environments.

Documentation covers comprehensive content such as detailed embedded Linux driver development guides, C application programming manuals, quick start guides for the development board, user instructions for factory system source code, hardware reference manuals, Qt development environment configuration, system logo modification, network environment setup (NFS/TFTP), and file transmission.

Complete hardware materials are also available, including the core board datasheet, interface manuals, baseboard schematics, baseboard component footprint libraries, mechanical dimension drawings and chip reference documents.

1.2 Typical Application Areas

The i.MX91 is designed for low-power, secure Linux edge computing platforms, applicable to application scenarios including industrial automation control, human-machine interface (HMI) terminals, building automation, EV charging terminals, medical monitoring and portable medical devices, smart home control hubs, Matter IoT platforms, connected home appliances, and lightweight home entertainment equipment.

Leveraging the Cortex-A55 processor architecture, the Linux software ecosystem, and EdgeLock Secure Enclave security capabilities, the i.MX91 enables customers to rapidly build edge intelligent devices that balance connectivity, security, reliability and cost efficiency.

Chapter 2. Development Board Resources

2.1 Processor Resources

The i.MX91 processor integrates a 64-bit single-core ARM Cortex-A55 with a maximum main frequency of 1.4 GHz, delivering outstanding computing performance and energy efficiency.

It supports a wide range of peripheral interfaces, including I2C, I3C, SAI, SPI, UART, CAN-FD, Gigabit Ethernet, LCD RGB, USB, SDIO, JTAG and ADC, meeting the demands of embedded systems for high-speed communication, data acquisition and diversified peripheral expansion.

With high integration and great flexibility, the i.MX91 processor is widely applied in multiple fields such as smart home, industrial control, connected home appliances, medical equipment and home entertainment, providing a solid platform foundation for customers' product innovation and rapid development.

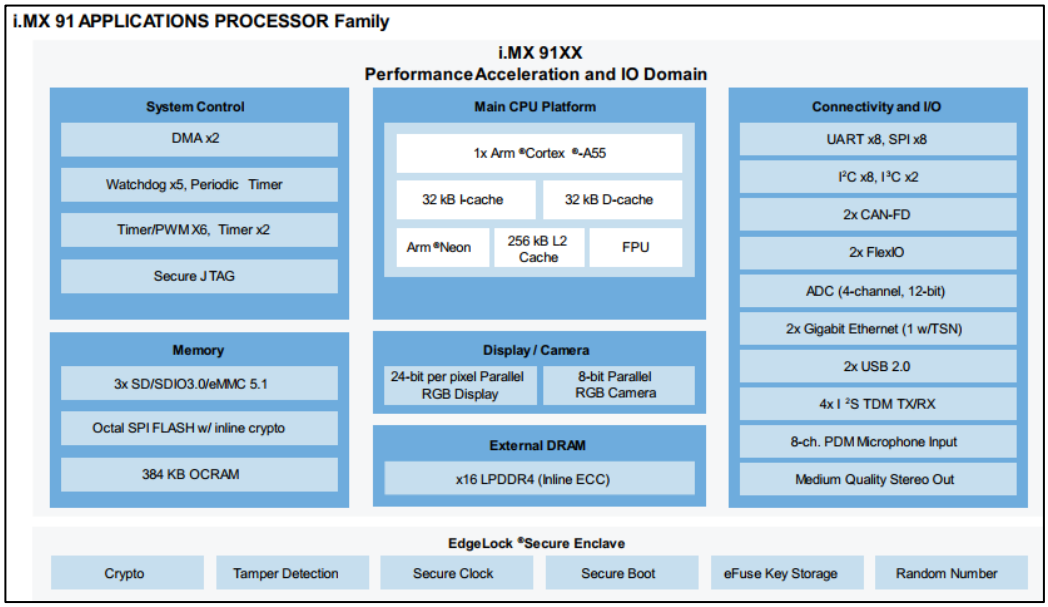

Figure 2.1-1 i.MX91 Processor Resource Block Diagram

A summary of partial resources of the i.MX91 processor is shown in the table below.

i.MX91 Processor Resources			
Cortex-A55	1×, 1.4GHz, 64-bit Armv8	**DRAM**	LPDDR4
USB	2, HOST/OTG	**RGB LCD**	1, 24 bit
Ethernet	Up to 2 channels of Gigabit Ethernet	**Parallel CSI**	1, 8 bit, YUV/RGB
CAN-FD	Up to 2 channels	**SAI**	Up to 3 channels
LPUART	Up to 8 channels	**Timer/PWM**	Up to 6 channels
LPI2C	Up to 8 channels	**Timer**	Up to 2 channels
LPSPI	Up to 8 channels	**WDOG**	Up to 5
I3C	Up to 2 channels	**JTAG**	1
I2S	Up to 4 channels	**FlexIO**	2
ADC	1, up to 4 channels, 12bit		

Note: These are the chip datasheet resource parameters, **not** the available resource parameters of the development board.

2.2 Onboard Peripheral Resources

The baseboard of the ATK-DLIMX91S development board adopts an efficient and streamlined design. It integrates multiple commonly used functional interfaces, including 2-channel Gigabit Ethernet, 1 TF card slot, 2 USB Host ports and serial ports, covering the core resources required for mainstream embedded system development.

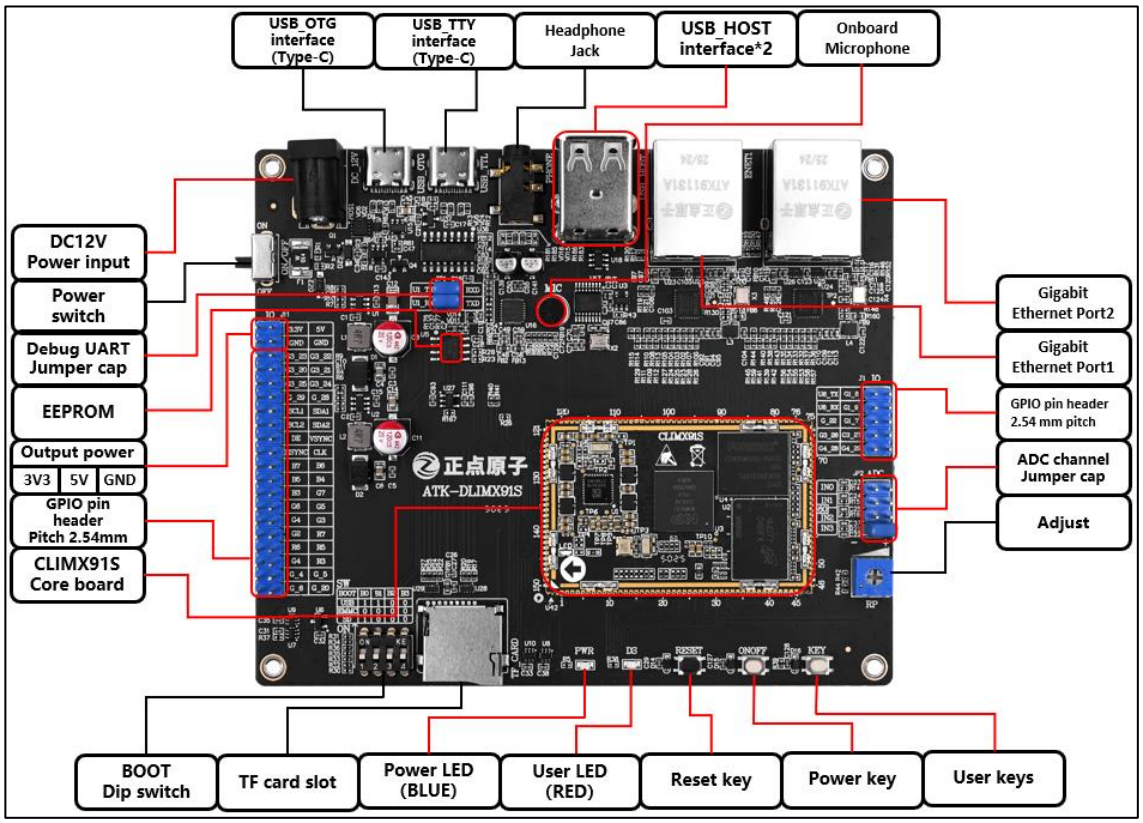

Figure 2.2-1 ATK-DLIMX91S Development Board Front View Resource Diagram

A summary of all functions and peripheral interface resources of the ATK-DLIMX91S development board is shown in the table below.

Category	Resource Summary		
Castellated Interface	ATK-CLIMX91S core board, with a total of 150P vias		
Memory & Storage	RAM:1GB LPDDR4	ROM:8GB EMMC	TF card slot * 1
Human-Computer Interaction	Power Indicator LED	System User LED	ONOFF key*1
	Reset Button*1	User Button*1	ADC connect interface*4
	Adjustable Potentiometer*1	BOOT DIP Switch*1	
Download & Debugging	USB_TTL UART x1 (Type-C)	USB OTG interface x1 (Type-C)	
Display Interface	RGB565 interface ×1 (occupies 2×20P IO pin header interface; an RGB adapter test board is required)		

Wired Communication	Gigabit Ethernet Interface ×2	USB HOST interface x2	
Audio Function	Headphone jack ×1, supports 4-segment earphones.	Electret microphone ×1	
IO Pin Header Group	2×5P IO pin header interface ×1, 2.54mm pitch		
	2×20P IO pin header interface ×1, 2.54mm pitch		
Onboard Chip	ES8390 chip*1	AT24C64 chip*1	YT8531C chip*2
	CH343G chip*1		
Power Related	3.3V output interface*1	5V output interface*1	
	DC 12V input interface*1	Power switch*1	

Description: The PCB design files of the ATK-DLIMX91S RGB adapter test board are open-source and uploaded to the corresponding development board data cloud disk. Users can download and manufacture the PCB for testing as needed.

2.3 Development Board Software Resources

2.3.1 Software Resource Summary

Category	Item	Version	Status
Bootloader	U-Boot	2024.04	Supported
Kernel	Linux Kernel	6.6.52	Supported
RootFS	Yocto	Mickledore	Supported
Toolchain	GCC Toolchain	13.3.0	Supported

2.3.2 Driver Support Table

Driver Category	Corresponding Module/Node	Status	Remarks
UART	lpuart1、lpuart8	Supported	LPUART1 serves as the console
GPIO key	gpio_keys	Supported	User key
GPIO LED	leds	Supported	System indicator LEDs
I2C bus	lpi2c1、lpi2c2、lpi2c6	Supported	Three-channel I2C enabled
EEPROM	eeprom@50(AT24C64)	Supported	I2C EEPROM
PMIC/Power	pmic@32(PF9453)+fixed regulators	Supported	Including BUCK / LDO / fixed power supply
Audio CPU DAI	sail	Supported	MCLK output configured
Audio Codec	es8390@11	Supported	I2C audio codec
Sound card binding	simple-audio-card	Supported	I2S sound card link

ADC	adc1	Supported	External vref_1v8
CAN	flexcan1	Supported	Drivers are implemented in module mode.
Mailbox/MU	mu1、mu2	Supported	Message Unit
RPMSG	MU-related channels	Supported	Some components adopt module mode.
Gigabit Ethernet Port1	eqos	Supported	RGMII interface
Gigabit Ethernet Port2	fec	Supported	RGMII iterface
PHY driver	ethphy1、ethpy2	Supported	Realtek PHY
USB OTG	usbotg1	Supported	OTG mode
USB Host	usbotg2	Supported	Host mode
eMMC	usbhc1	Supported	8-bit, on-board storage
SD card	usbhc2	Supported	4-bit, card detection
watchdog	wdog3	Supported	System watchdog
Temperature Sensor	tempsense0	Supported	SoC temperature detection
Touch Screen	goodix_ts@14(GT9271/GT911)	Supported	Drivers in module mode
RGB display	lcdif+parallel_disp_fmt+panel-dpi	Supported	RGB parallel interface display
Backlight	panel-rgb-backlight	Supported	GPIO backlight control

Chapter 3. Product Specifications

3.1 Development Board Appearance

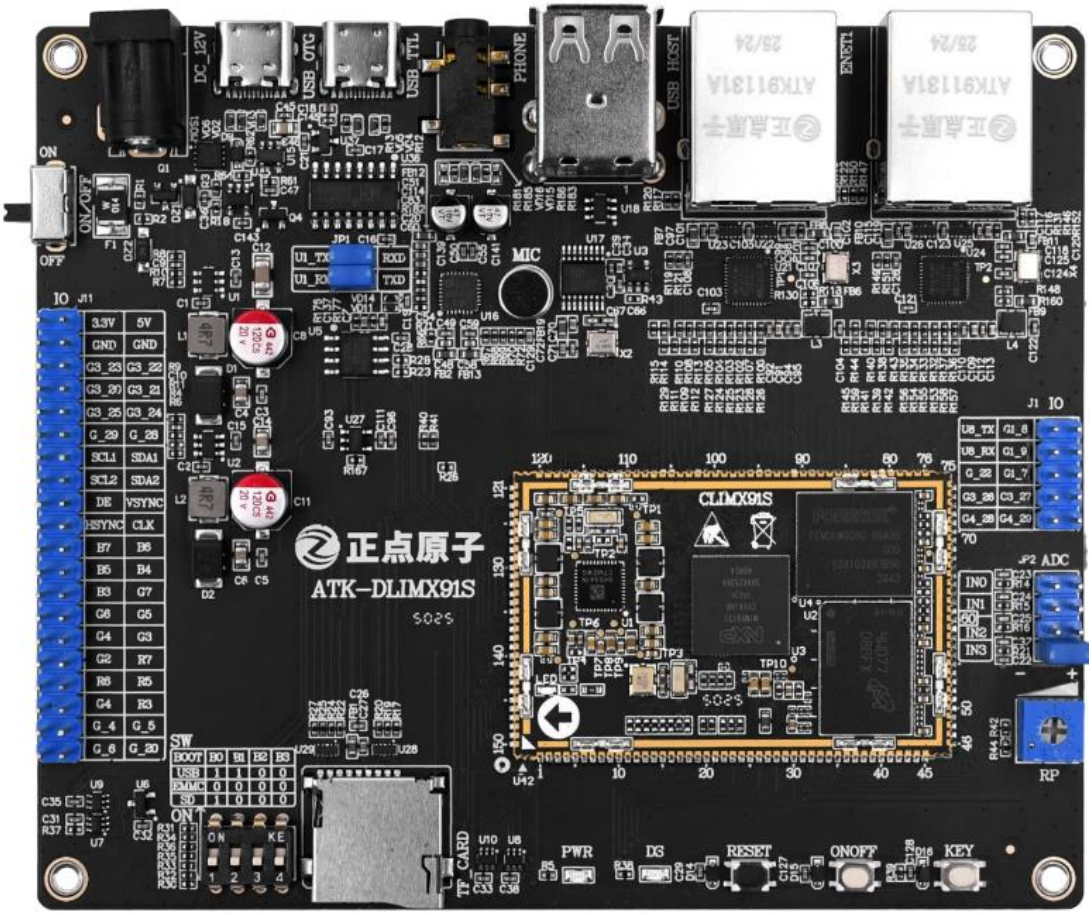

Figure 3.1-1 Front side of the development board

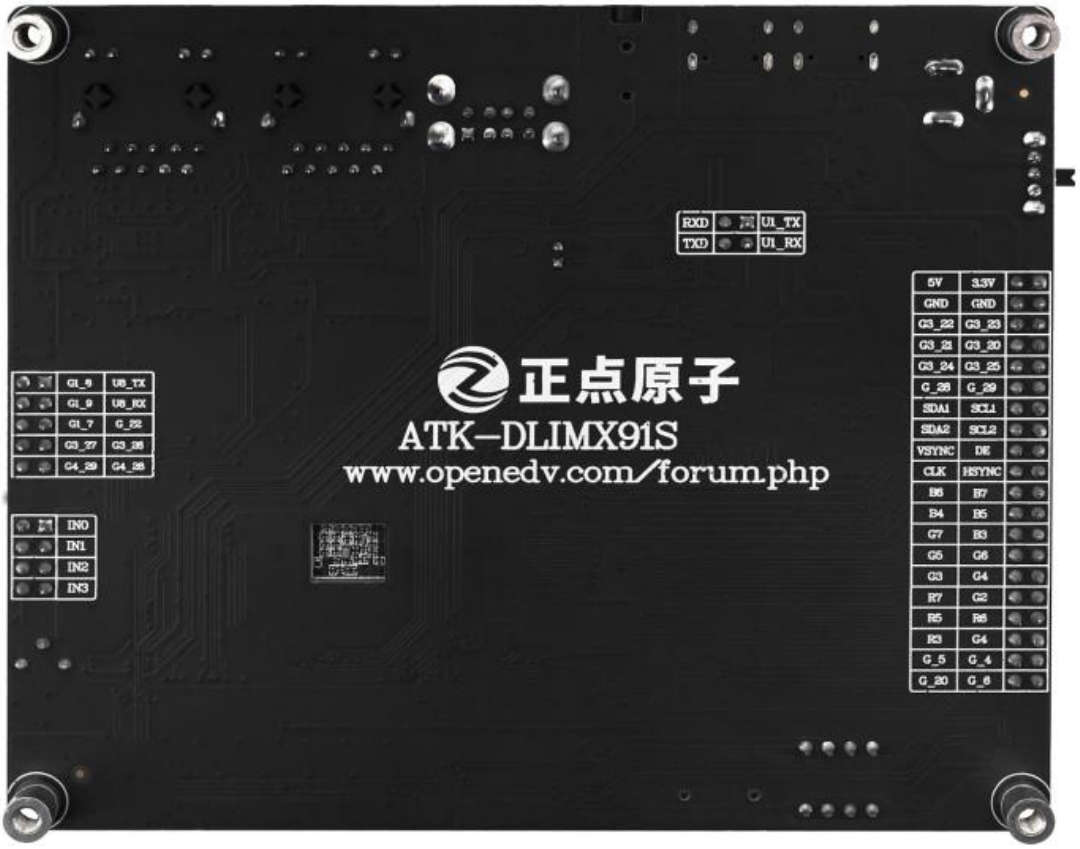

Figure 3.1-2 ATK-DLIMX91S Development Board Bottom

3.2 Mechanical Dimensions of the Development Board

The overall dimensions of the development board are 120mm × 100mm. The figure below shows the outline dimensions of the development board baseboard and the positions of mounting holes.

(Please contact our after-sales technical support if you require detailed dimensional parameters of each interface.)

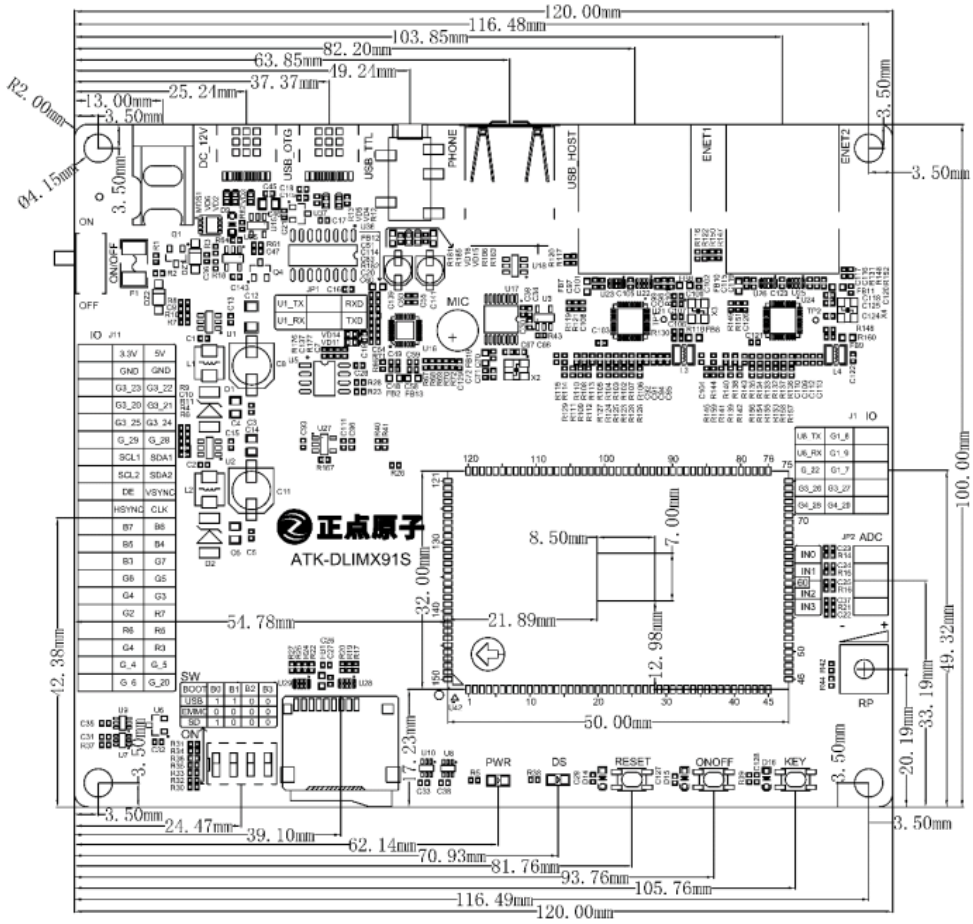

Figure 3.2-1 Mechanical Dimension Drawing of ATK-DLIMX91S Development Board

3.3 Adapted Modules of the Development Board

At present, the development board is compatible with a number of modules. If you need more adapted modules for the ATK-DLIMX91S development board, please contact the technical support of the Official Store of ALIENTEK for consultation.

Note: When testing the following modules with the ATK-DLIMX91S development board, a dedicated RGB LCD adapter test board is required for matching use.

The PCB design files of this test board have been open-sourced and released in the corresponding development board data cloud disk

(Disc A of the development board CD – Basic Materials\06. Hardware Resources\06. RGB LCD Display Adapter Test Board).

Users shall download the files and conduct board verification on their own.

正点原子旗舰店
4.3寸RGBLCD触摸屏模块
RGB屏 | 电容屏 | 800*480
支持5点同时触摸
提供ST驱动

正点原子旗舰店
7寸RGBLCD触摸屏模块800
RGB屏 | 电容屏 | 800*480
支持5点同时触摸
提供ST驱动

正点原子
7寸RGBLCD触摸屏模块1024
RGB屏 | IPS电容屏 | 1024*600
支持5点同时触摸
提供ST驱动

正点原子旗舰店
10.1寸RGBLCD触摸屏模块
RGB屏 | 电容屏 | 1280*800
支持10点同时触摸
RGB/LVDS

Chapter 4. Product Documentation

ALIENTEK provides extensive development documents and software resources for the ATK-DLIMX91S development board, covering fields such as Linux driver development and Linux C application programming. All software resources are fully available for free download.

Software resources include but are not limited to U-Boot source code, Linux kernel source code, peripheral driver source code, file system, Qt interface source code, Linux C application source code, as well as relevant development tools and development environments.

Document resources consist of detailed tutorials and user manuals. The tutorials include the Embedded Linux Driver Development Guide, Embedded Linux C Application Programming Guide, Qt Development Manual and other materials. User manuals cover comprehensive documents such as the Development Board Quick Start Guide, Virtual Machine Operation Reference Manual, Factory System Source Code Usage Guide, Hardware Reference Manual, Factory System Logo Modification Manual, Network Environment NFS/TFTP Configuration Manual, and File Transmission Reference Manual.

Hardware resources include the core board specification, baseboard schematic documents, core board interface datasheets, baseboard component integrated package libraries, mechanical dimension drawings, chip reference manuals and other related materials.

4.1 Document Download

ATK-DLIMX91 Development Board Resource Download Center:
http://www.openedv.com/docs/boards/arm-linux/iMX91.html

4.2 Data Description

First-level directory of ATK-DLIMX91S development board materials:

Figure 4.2-1 First-Level Directory of Development Board Materials

Development Board Directory Description:

Directory	Description
01_codes	Factory system source code, tutorial routine source code, Qt interface source code, etc.
02_sch	Baseboard Schematic Diagram of Development Board
03_software	Serial terminal, file transmission, source code reading, virtual machine and other software-aided development tools
04_reference	Reference documents such as protocol manuals and ARM manuals

05_tools	Cross compiler and others
06_hardware	Onboard chip documents of the development board, development board component libraries, core board materials and other related resources
07_IMX91_reference	i.MX91 reference manuals, datasheets, etc.
08_system_image	Factory system image flashing firmware package
09_tutorials	Detailed documents including Linux driver development, Linux C application programming guidelines, Qt development and more
10_user_manual	Documents for quick start experience, Qt5 environment setup, etc., to help users accelerate development.

4.2.1 User manual

Ducument	Description
ATK-DLIMX91S Quick Start Manual	Board flashing system, usage preparation, functional testing
ATK-DLIMX91S Virtual Machine User Manual	Built virtual machine: installation and basic usage instructions
ATK-DLIMX91S Factory System Source Code Guide	Introduction to Factory System Source Code Compilation and Image Construction Methods
ATK-DLIMX91S Hardware Reference Manual	Development board hardware resource description and hardware design reference
ATK-DLIMX91S Development Board Specification	Development Board Specification, reference for preliminary project selection
ATK-DLIMX91S Firmware Update Reference Document	System firmware partition description and firmware update method introduction
ATK-DLIMX91S File Transfer Reference Manual	File transfer operations between computer and development board
ATK-DLIMX91S Factory System TFTP Setup Manual	TFTP Configuration and Testing of Development Board Factory System
ATK-DLIMX91S Factory System NFS Setup Manual	NFS Configuration and Testing for Development Board Factory System
ATK-DLIMX91S Embedded Qt6 Development Environment Configuration	Qt Installation, Toolchain Configuration and Usage Examples
ATK-DLIMX91S Factory Interface QtUI User Guide	Instructions for Compilation and Usage of QT Source Code for Development Board Factory Interface
ATK-DLIMX91S U-Boot Command Reference Manual	Introduction to Common U-Boot Commands
ATK-DLIMX91S Factory System Logo Modification Manual	Introduction to Kernel-stage Logo Modification Method of Factory System
ATK-DLIMX91S Buildroot Construction Reference Manual	Buildroot Minimal File System Construction on the Development Board

4.2.2 Tutorials

Documents	Description
ATK-DLIMX91S Ubuntu Setup & Linux Basic Learning Manual	Environment Setup and Basic Command Learning
ATK-DLIMX91S Embedded Linux Development Environment Setup Manual	Environment Setup and Basic Command Learning
ATK-DLIMX91S Embedded Linux Driver Development Guide	Kernel Subsystem Learning and Development Board Configuration Instructions
ATK-DLIMX91S Embedded Linux C Application Programming Guide	Application Programming Learning Based on the Factory System

4.2.3 Core board data

Documents	Description
ATK-CLIMX91S Core Board Specification	Core Board Specification for preliminary project selection
ATK-CLIMX91S Core Board Interface Datasheet	Core Board Interface and Pin Function Description
ATK-CLIMX91S Core Board Usage Precautions	Core Board Usage Precautions and Small System Board Design Instructions
ATK-CLIMX91S Core Board Mechanical Dimension Drawing	Core Board Mechanical Dimension Data

Chapter 5. After sales service

5.1 Terms of after-sales service

1). After receiving the goods, please open them in front of the express, and sign after acceptance. If you find that the goods are less after signing, take photos in time and contact the seller's customer service to explain the situation within 15 days. If the feedback is lack of goods after 15 days, we will not reissue the goods. Other reasons notwithstanding).

2). 15 days -1 month: we are responsible for the return freight repair of product problems. Human factors damage expensive main chip or LCD screen, touch screen. The buyer needs to pay the cost and one time shipping fee, no maintenance fee.

3). 1-3 months: the problem of the product itself (non-human factors), we are responsible for the delivery of the past freight maintenance. If the main chip is burned out and the LCD screen and touch screen are damaged, the buyer needs to pay the cost, and the maintenance fee is not charged.

4) After 3 months: the buyer shall bear the return freight and the cost of chip, LCD screen and touch screen. No service charge.

5.2 After-sales Support

Technical support:

QQ group:

ALIENTEK i.MX9 Communication group(Customers inquire about the group number.)

ALIENTEK i.MX9 User Group (order number required)

Taobao shop: ALIENTEK flagship store

Tel: 020-38271790 (Linux technical support via reception)

Forum: http://www.openedv.com/forum-279-1.html